VENTILATION TECHNOLOGY

The ventilation equipment provides for a sufficient supply and exhaust air in the composting hall and the individual windrow fields.
The flow of supply and exhaust air depends on the hall size and the desired rate of air change. While the air change rate in the hall has an approximate value of 2, a suction of eight to nine times is used to ensure optimum oxygen supply.

The entire exhaust air is pretreated in the air washer. A mixture of water and sulphuric acid is sprayed into the air flowing in vertically. Water-soluble ingredients are washed out of the outgoing air. The demister eliminates droplets contained in the outgoing air. After that, the exhaust air is fed to the biofilter for deodorizing.
Once the plant parameters have been entered, the ventilation equipment is controlled fully automatically.

WETTING SYSTEM

The process water equipment performs several functions, e.g. filtering collected leakage water and condensate and pumping them to the storage tanks.
Furthermore, water must be fed to the process from these tanks for every type of windrow treatment. The entire water flow generated must be re-used for wetting the windrows. The condensate generated from the ventilation centre, the air washer as well as the condensate and precipitation from the biofilter is fed to the condensate collecting shaft and pumped to the process water from there. If a level sensor detects too low a filling in the process water tank, fresh water, preferably rain water, can be added.

The wetting of the material is fully automatic. Depending on the moisture contents of the input material, wetting is performed during the charging and every turning process. In case of very wet material in autumn and winter wetting can be switched off completely.
The operator must manually enter the setpoints for the supplied water flow and the individual windrow fields. The water supply is volumetric. A certain flow of water is added for every cubic meter of material.

MACHINE STRUCTURE

THE MACHINE MAINLY CONSISTS OF THE FOLLOWING MAJOR ELEMENTS

- Crane bridge including electrical motor for the travel drives
- Cross-transfer carriage with electric motor
- Bucket wheels
- Inclined conveyor
- Travel and reversible conveyor
- Electrical power supply
- Wetting system
- Control system

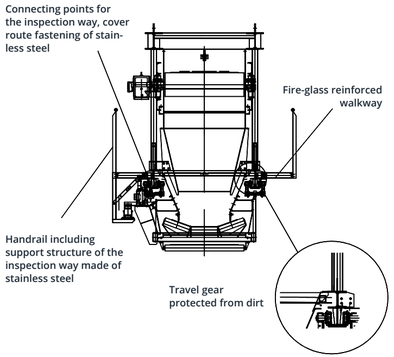

SUTCO® - WINDROW SYSTEM WENDELIN HEAP COMPOSTING

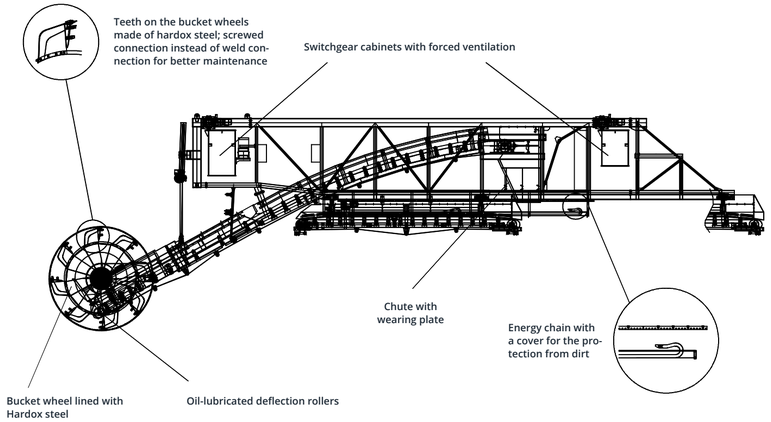

24/04

ADVANTAGES OF THE SUTCO® WENDELIN

- Flexible construction with 3 different sizes
- Material-dependent turning capacity of up to 260 m³/h
- Support structure, handrails and grates of non-rusting material
- Where admissible, the screws are made of stainless steel
- Steel parts according to C5-I corrositivity category
- Teeth on the bucket wheel are made of resistant low-wear Hardox steel
- Wheel bucket and teeth mounted by screwed connection
- The conical surface within the bucket wheel is lined with Hardox steel
- The deflection rollers of the inclined belt are on oil-lubricated bearings
- Bearing units of the travel drive are with automatic lubrication
- Chute lined with a wearing plate
- Energy supply as well control lines are run through energy chains to the bridge, trolley and reversible belt
- To prevent an extreme contamination of the energy chains, they are protected by a cover
- Short cable routes by a re-positioning of the terminal boxes
- Cabling of the machine by LAPPKABEL Ölflex Robust
- Pre-installation of the conduits for corrosion control
- Energy chain route made of 1.4571

Sutco® RecyclingTechnik GmbH
Paffrather Str. 102-116, 51465 Bergisch Gladbach, Germany
Phone +49 2202 2005 01 E-Mail info@sutco.de Web www.sutco.com

WE GET THE BEST OUT

WINDROW SYSTEM WENDELIN

WE GET THE BEST OUT

APPLICATION LIMITS

GENERAL

The Wendelin system enables simple material handling for medium to high throughput rates with minimum labour input. The machine treats a single contiguous rotting field. Aeration takes place in sections at intervals.

FIELD OF APPLICATION

The Wendelin is used for processing green and biowaste as well as organic waste and can also process fermentation residues without any problems. This technology is therefore also very suitable for mechanical-biological waste treatment plants.

TRANSFER CAPACITY

Depending on the composition of the material, the Sutco Wendelin can process up to 260 cubic metres per hour.

CAPACITY RANGE

The capacity range of the Sutco Wendelin series can be used flexibly and is divided into 3 groups.

SERIES OVERVIEW

PERFORMANCE RANGE SUTCO WENDELIN SERIES
>> for low (0.55 t/m³) and higher (0.65 t/m³) bulk densities

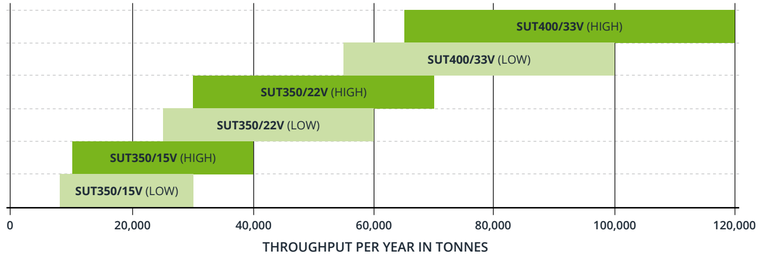

>> FLEXIBLE PERFORMANCE RANGE WITH MACHINES IN THREE SIZES (SUT350/15V, SUT350/22V, SUT400/33V)

MATERIAL

Due to the harsh environmental conditions, corrosion control is of special importance. In addition to the protection by painting, components such as inspection ways, platforms, handrails and ladders are made of non-rusting materials
Highly stressed surfaces such as the buckets of the bucket wheel are lined with wearing plates to maximize the service life.

The energy chains provide power for the individual machine elements.
They provide power and energy for the machine.
Due to the harsh ambient conditions, plastics and stainless steel is used for the energy chains and guide troughs.

FUNCTION AND MODE OF OPERATION

The Sutco Wendelin turning machine has been developed for aerobic treatment of organic material. The organic material is milled, defibrated, wetted and piled up again the rear area of the machine in one step. The bucket wheel loosens the material and thus makes sure that the material is optimally aerated during the further process.
The piling up of the new windrow is controlled such that the material height is always equal to the height of the primary windrow. The volume reduction of the composting mass by the organic degradation is automatically compensated by the travel and reversible conveyor.
Two steel girders run across the composting hall. They include travel gear supports, the so called crane bridge, which can be moved over the entire composting hall length.
The "trolley" consisting of a cross-transfer car, inclined conveyor, bucket wheels as well as a travel and reversible conveyor is mounted to the crane bridge.

While the slowly rotating bucket wheels move the compost from the bottom to the top, the trolley runs over the width of the composting field. When the trolley stops at the lateral stop, the bridge is moved by a desired distance to the windrow to be removed, depending on the material composition. Then, the cross-transfer car moves to the opposite direction up to the other lateral stop.
This process removes a "shaving" which is up to 30 centimeters thick from 2 to 3.3 m high windrow.
The product is loosened and mixed. According to the turning capacity and the humidity contents of the material, the required water volume is added at the transfer point to the reversible belt. Thus, the Sutco Wendelin turning device runs over the entire length of the windrow from the completed material up to the input.

CHARGING EQUIPMENT

The charge of compost material is performed via a conveyor permanently mounted to a hall side. From there, the material is fed to a second conveyor belt which is mounted to the charging bridge and can moved with in the longitudinal direction of the hall. This belt conveys the input material to the conveyor permanently mounted to the charging bridge. Again, this belt throws the material onto the conveyor belt which can be moved and reversed on the charging bridge. Its movement on the charging bridge and the longitudinal movement of the charging bridge transversely to the composting hall causes the input material to be placed at a dumping height of approx. 0.25 - 0.3 meters. The bridge moves forward approx. 0.45 - 0.5 meters per minute. This makes sure that there is a homogeneous mixture of material already at the beginning of the process.
The maximum height of the material depends on the material and is between 2.0 and 3.3 meters. The height of the placed material is continuously measured and monitored by an ultrasonic height sensor.

DISCHARGE

Also, Sutco Wendelin is used for discharging the final product. The final windrow is removed by the Sutco Wendelin turning device and transferred to the discharging belt via the travel and reversible conveyor. The discharge equipment conveys the material for a post-treatment outside the hall.